FUA-A

Notes

1. The unit nameplate is located on the control box cover.
2. When installing a wireless controller, there will be a receiver on this location. For details, see the drawing of the wireless controller.
3. When closing the discharge grille in case of 2-way blow or 3-way blow, there are limitations to the piping connection direction. See the installation manual.
4. Do not place any objects under the indoor unit. In case of high humidity (>80%), clogged drain outlets, or dirty air filters, condensate may drop out.

When closing the air outlet, the required space is 30mm or more. (Note 3)

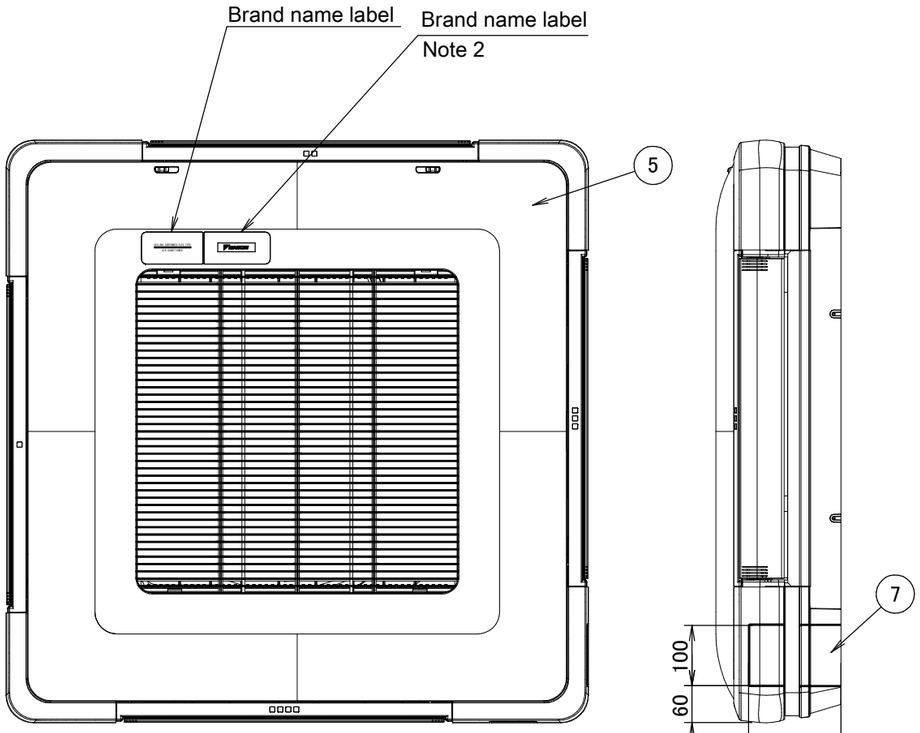

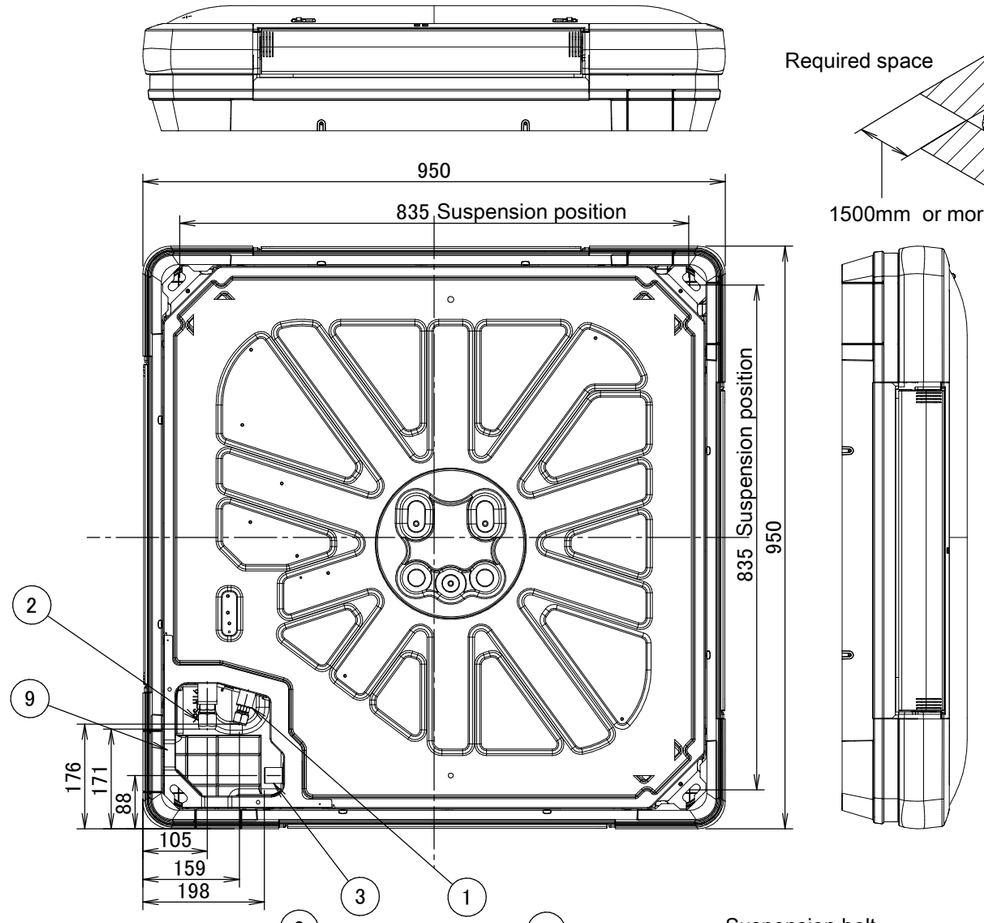

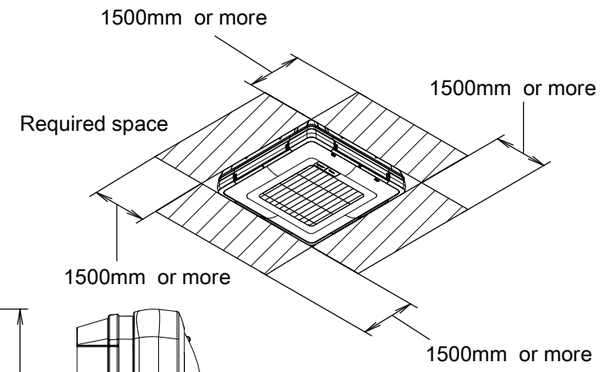

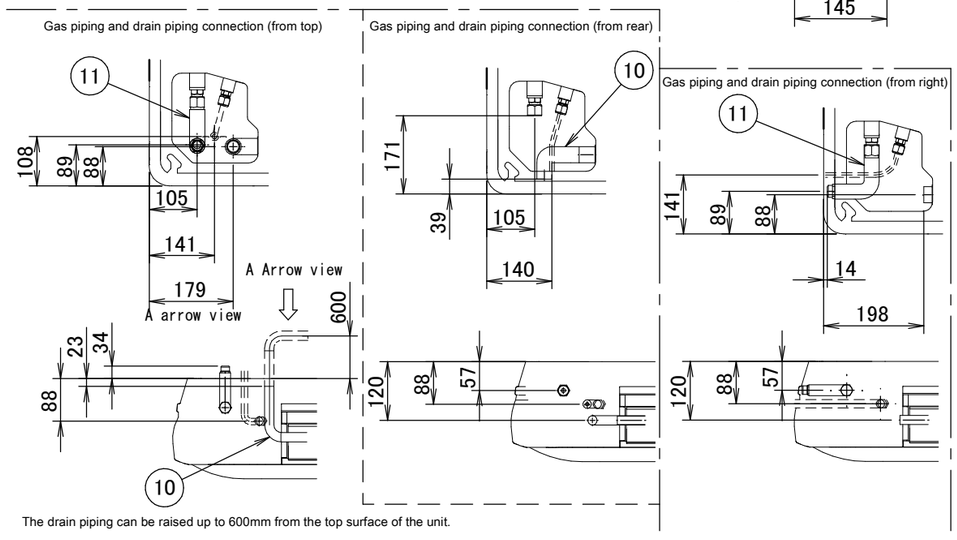

The drain piping can be raised up to 600mm from the top surface of the unit.

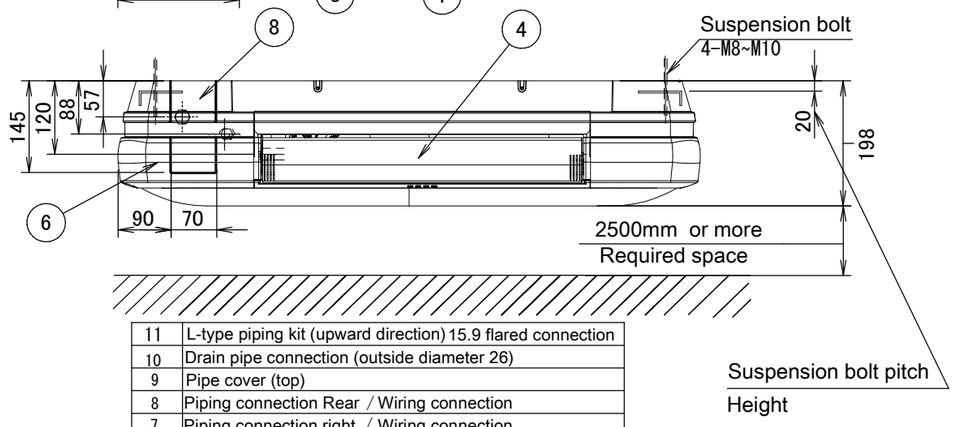

11	L-type piping kit (upward direction) 15.9 flared connection
10	Drain pipe connection (outside diameter 26)
9	Pipe cover (top)
8	Piping connection Rear ／Wiring connection
7	Piping connection right ／Wiring connection
6	Corner decoration cover
5	Air suction grille
4	Air discharge outlet
3	Drain socket VP20
2	Gas pipe connection 15.9 flare
1	Liquid pipe connection 9.5 flare

3D106356