FBA50A9

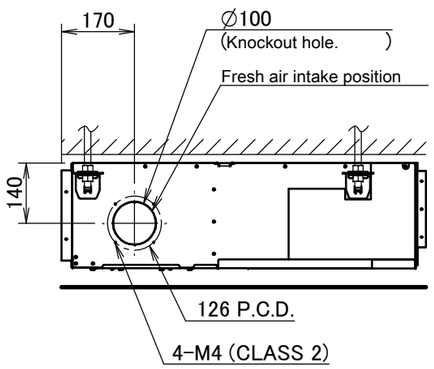

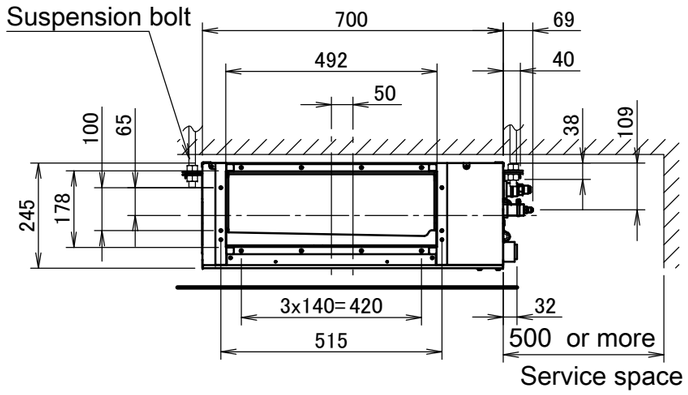

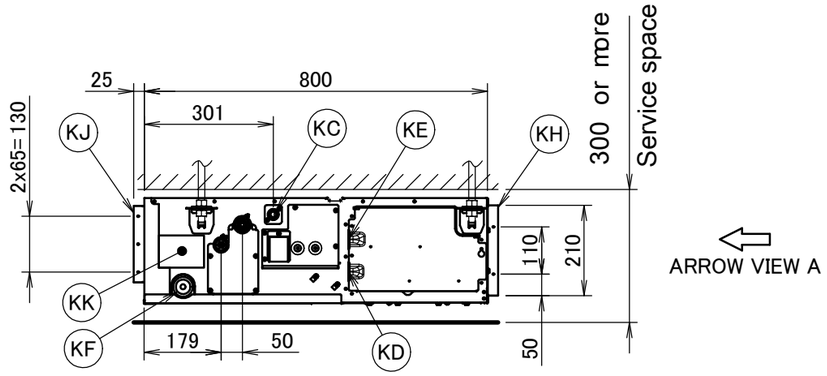

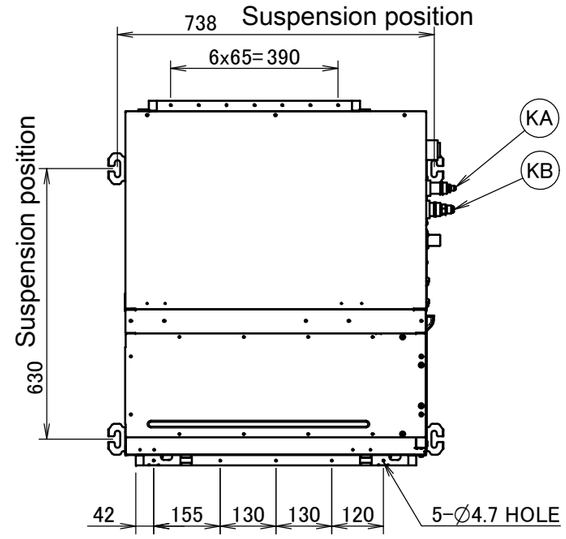

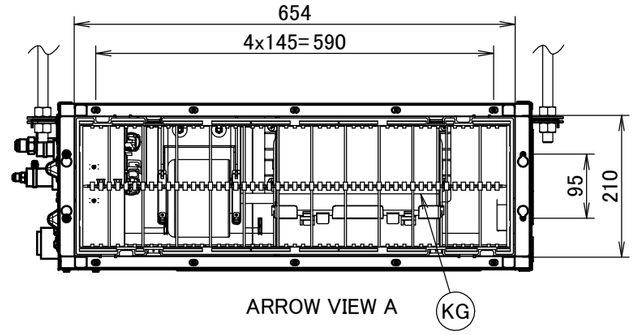

Item	Name	Description
KA	Liquid pipe connection port	Ø6.35 flared connection
KB	Gas pipe connection port	Ø12.70 flared connection
KC	Drain pipe connection	VP20 (OD Ø26, ID Ø20)
KD	Wiring connection	/
KE	Power supply connection	/
KF	Drain outlet	VP20 (OD Ø26, ID Ø20)
KG	Air filter	/
KH	Air suction side	/
KJ	Air discharge side	/
KK	Nameplate	/

Notes

1. When installing optional accessories, refer to their respective documentation.
2. The ceiling depth varies according to the documentation of the specific system.

3D094918B