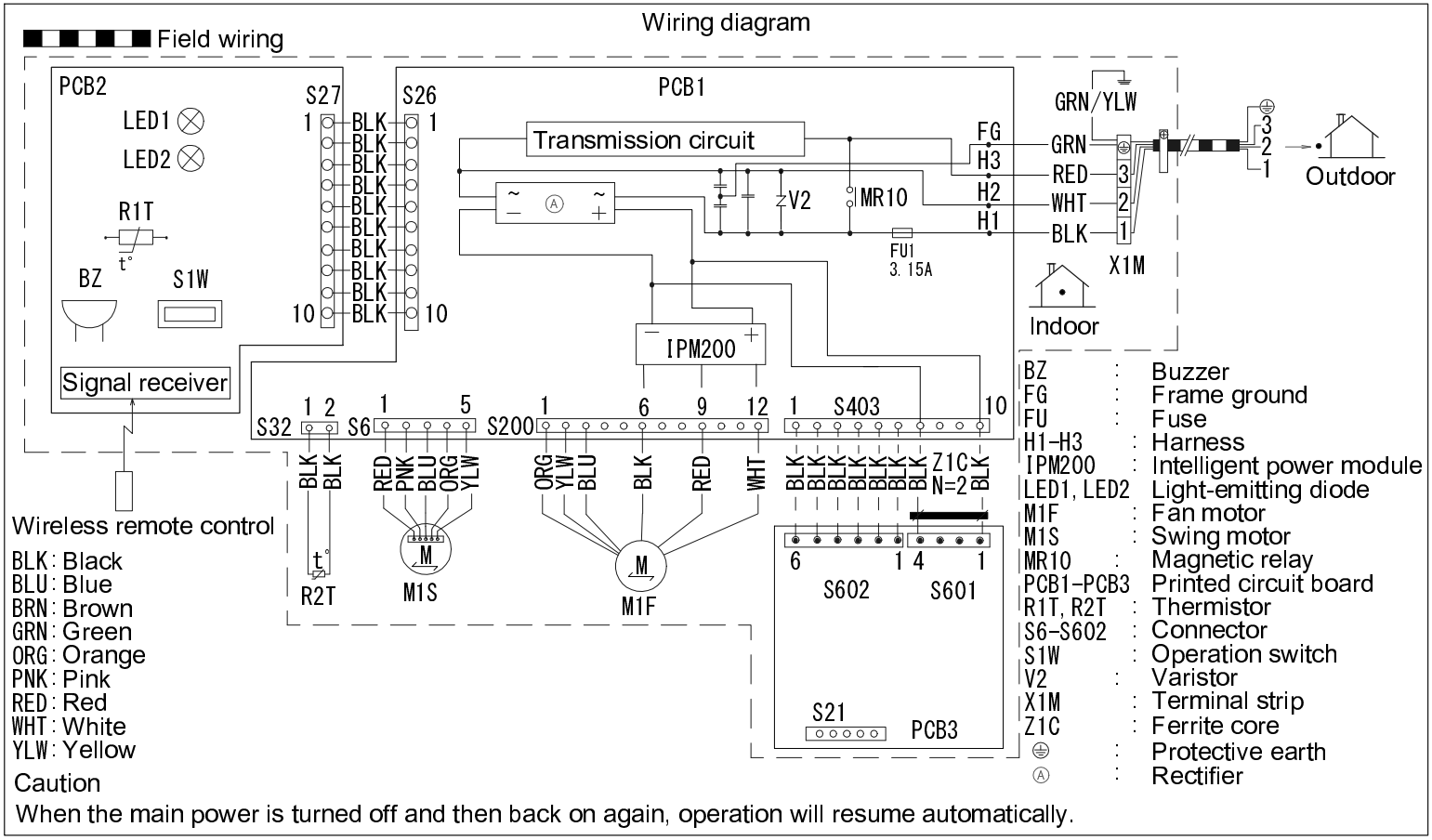

Notes

1. Size: length ·70· X width ·120·.
2. Refer to purchasing specification ·AS303002·, unless otherwise specified.