WIRING DIAGRAM

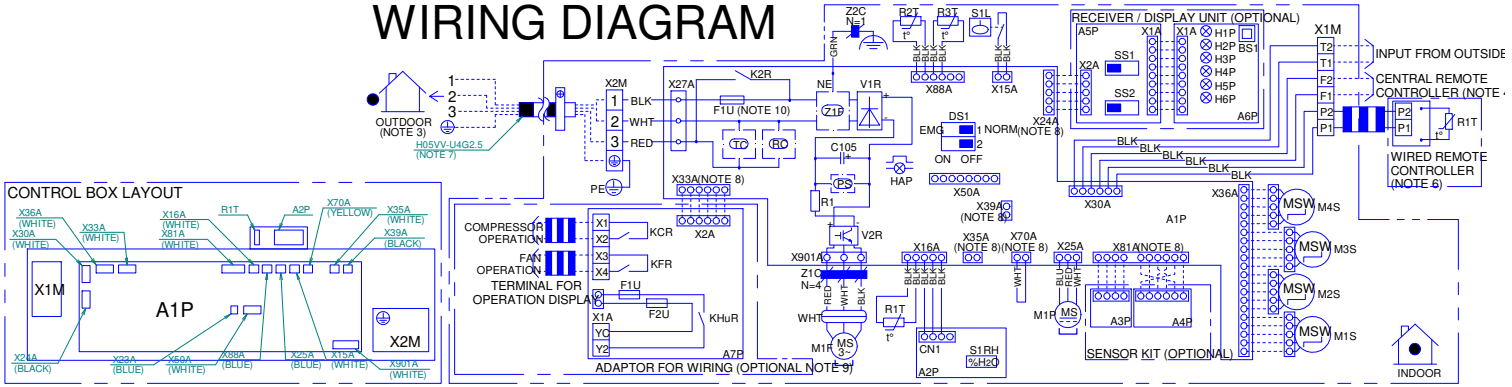

NOTES:

1. ▭▭▭: TERMINAL BLOCK, ▭: CONNECTOR, ▭▭▭: FIELD WIRING
2. IN CASE OF SIMULTANEOUS OPERATION INDOOR UNIT SYSTEM, SEE THE INDOOR UNIT WIRING ONLY.
3. FOR DETAILS, SEE WIRING DIAGRAM ATTACHED TO THE OUTDOOR UNIT.
4. IN CASE OF USING CENTRAL REMOTE CONTROLLER, CONNECT IT TO THE UNIT IN ACCORDANCE WITH THE ATTACHED INSTALLATION MANUAL.
5. IN CASE OF SIMULTANEOUS OPERATION SYSTEM, CONNECTED QUANTITY OF THE INDOOR UNITS VARIES ACCORDING TO THE CONNECTED OUTDOOR UNIT.
6. IN CASE OF MAIN/SUB CHANGEOVER, SEE INSTALLATION MANUAL ATTACHED TO THE REMOTE CONTROLLER.
7. SHOWN ONLY IN CASE OF PROTECTION PIPING, USE H07RN-F IN CASE OF NO PROTECTION.
8. X24A, X33A, X35A, X39A, X70A, X81A ARE CONNECTED WHEN OPTIONAL ACCESSORIES ARE BEING USED, SEE WIRING DIAGRAM OF THIS ACCESSORY.
9. CONNECT POWER OF ADAPTER FOR WIRING TO TERMINAL BLOCK (X2M) OF INDOOR UNIT DIRECTLY.
10. FUSE F1U ON MAIN PCB (A1P) IS PRESENT ONLY IN FOLLOWING UNITS: FCAG 35, 50, 60, 71.

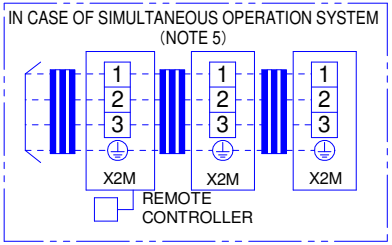

WIRE COLORS

BLK: BLACK	RED: RED
BLU: BLUE	WHT: WHITE
YLW: YELLOW	GRN: GREEN
BRN: BROWN	PNK: PINK

INDOOR UNIT	
A1P	MAIN PCB
C105	CAPACITOR
DS1	DIP SWITCH ON PCB
F1U	FUSE (T, 3.15A 250V)
HAP	FLASHING LAMP (SERVICE MONITOR: GREEN)
K2R	MAGNETIC RELAY
M1P	MOTOR (DRAIN PUMP)
M1F	MOTOR (INDOOR FAN)
M1S-M4S	MOTOR (SWING BLADE)
R1	RESISTOR
R1T	THERMISTOR (AIR)
R2T, R3T	THERMISTOR (COIL)
S1L	FLOAT SWITCH (DRAIN PUMP)
V1R	DIODE BRIDGE
V2R	IGBT POWER MODULE
X15-901A	CONNECTOR
X1M	TERMINAL BLOCK (REMOTE CONTROLLER)
X2M	TERMINAL BLOCK (POWER SUPPLY)
Z1C, Z2C	FERRITE CORE
Z1F	NOISE FILTER
PS	POWER SUPPLY CIRCUIT
RC	SIGNAL RECEIVER CIRCUIT
TC	SIGNAL TRANSMISSION CIRCUIT
NE	NOISELESS EARTH
SENSOR KIT	
A3P, A4P	SENSOR KIT PCB
WIRELESS REMOTE CONTROLLER (RECEIVER / DISPLAY UNIT)	
A5P	RECEIVER PCB
A6P	DISPLAY PCB
BS1	PUSH BUTTON (ON/OFF)
X1-2A	CONNECTOR
H1P	PILOT LAMP (ON: RED)

H2P	PILOT LAMP (TIMER: GREEN)
H3P	PILOT LAMP (FILTER SIGN: RED)
H4P	PILOT LAMP (DEFROST: ORANGE)
H5P	PILOT LAMP (ELEMENT CLEANING: RED)
H6P	PILOT LAMP (TIMER: GREEN)
SS1	DIP SWITCH (MAIN / SUB)
SS2	DIP SWITCH (WIRELESS ADDRESS SET)
ADAPTOR FOR WIRING	
A7P	ADAPTER PCB
F1U	FUSE (5A, 250V)
F2U	FUSE (5A, 250V)
KHuR	MAGNETIC RELAY
KCR	MAGNETIC RELAY
KFR	MAGNETIC RELAY
X1-2A	CONNECTOR
CONNECTORS FOR OPTIONAL PARTS	
X24A	CONNECTOR (WIRELESS REMOTE CONTROLLER)
X33A	CONNECTOR (ADAPTOR FOR WIRING)
X35A	CONNECTOR (AUTO CLEAN PANEL)
X39A	
X70A	
X50A	CONNECTOR (WI-FI ADAPTOR)
X81A	CONNECTOR (SENSOR KIT)
WIRED REMOTE CONTROLLER	
R1T	THERMISTOR (AIR)
HUMIDITY SENSOR	
A2P	SENSOR PCB
S1RH	HUMIDITY SENSOR
CN1	CONNECTOR