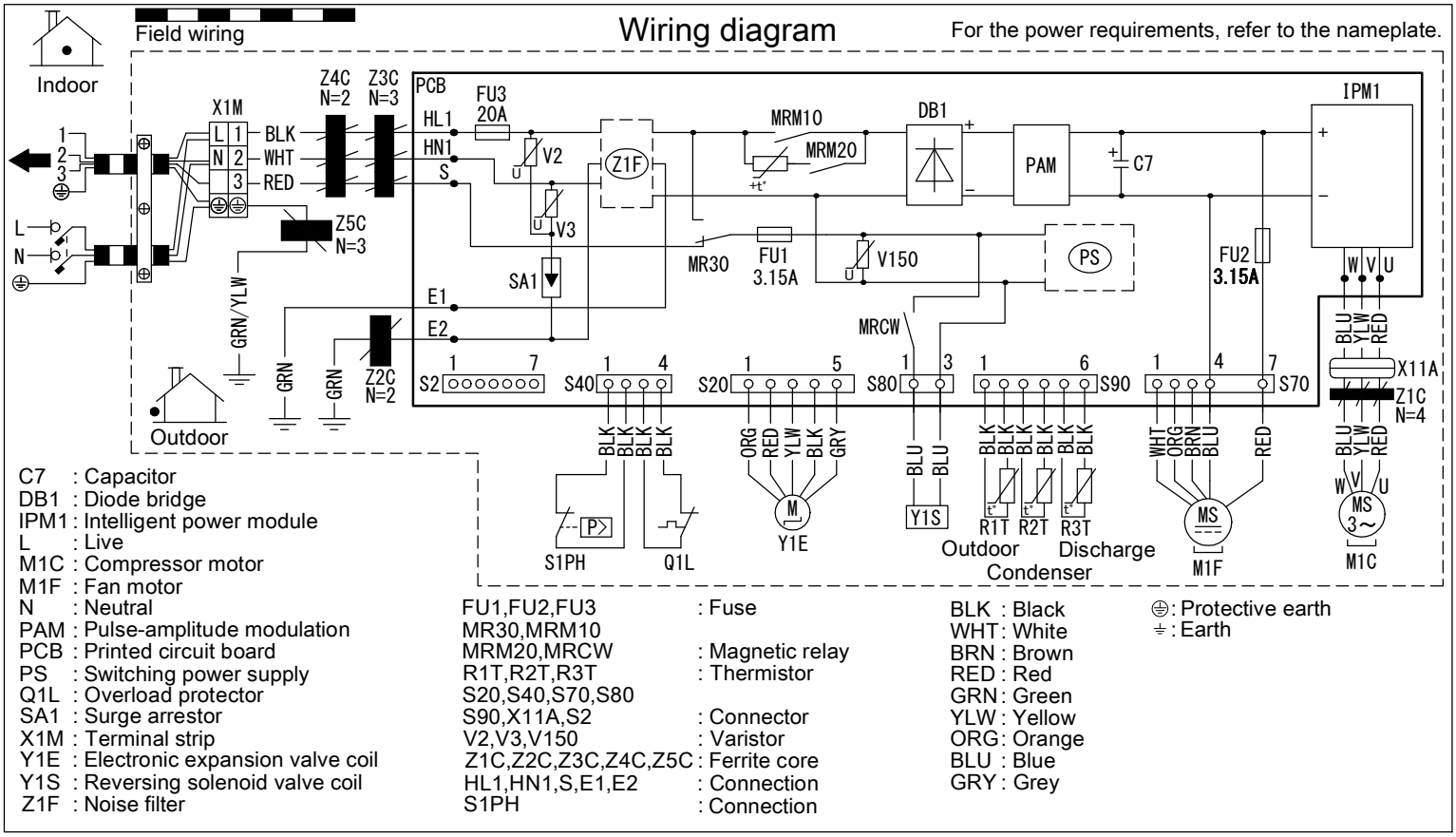

Notes

1 Size: 140 x 80

2 Refer to purchasing specification AS303002, unless otherwise specified.